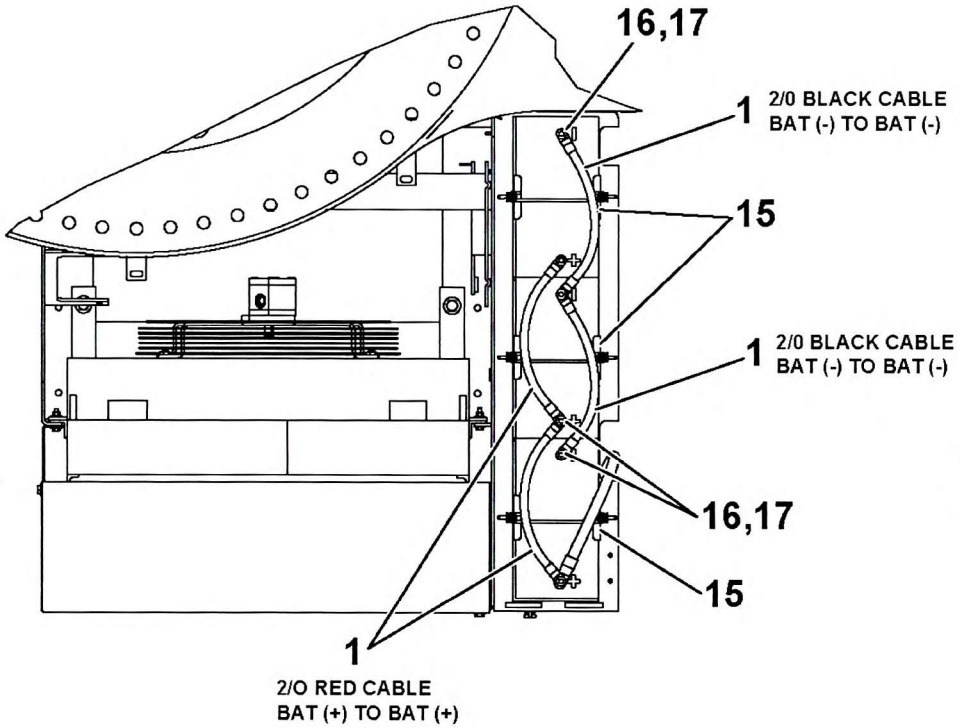
16,17
1
2/0 BLACK CABLE
BAT (-) TO BAT (-)
15
1
2/0 BLACK CABLE
BAT (-) TO BAT (-)
16,17
15
1
2/O RED CABLE
BAT (+) TO BAT (+)

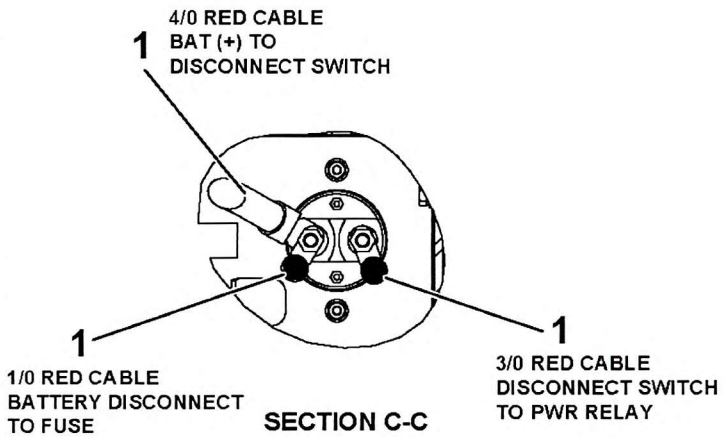
1
4/0 RED CABLE
BAT (+) TO
DISCONNECT SWITCH
1
1/0 RED CABLE
BATTERY DISCONNECT
TO FUSE
1
3/0 RED CABLE
DISCONNECT SWITCH
TO PWR RELAY
SECTION C-C

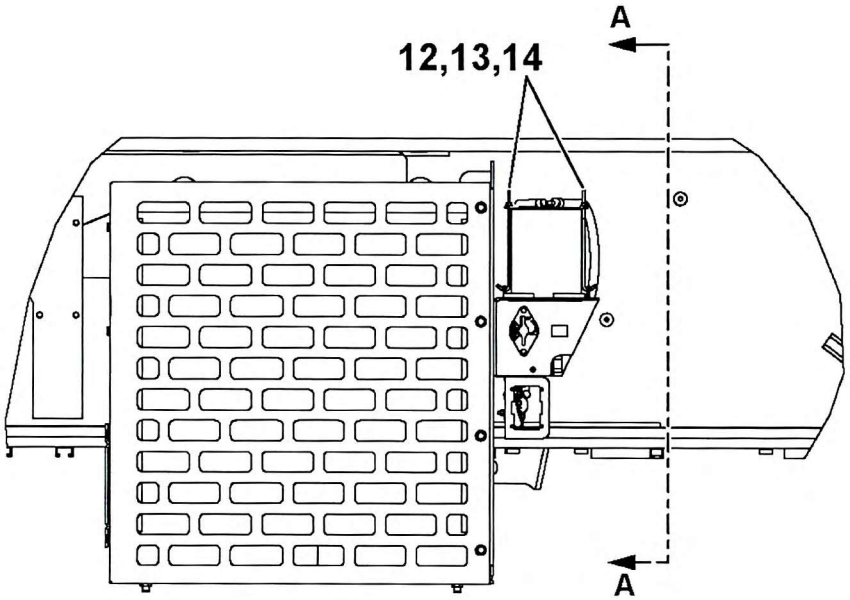
A
12,13,14
A

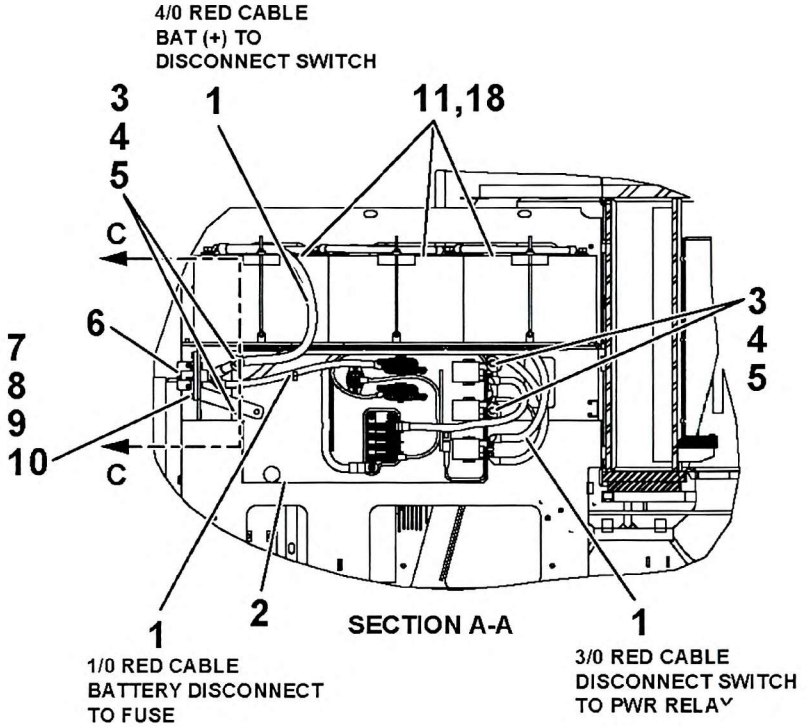
4/0 RED CABLE
BAT (+) TO
DISCONNECT SWITCH
3
4
5
1
11,18
C
6
7
8
9
10
C
3
4
5
1
2
1
1/0 RED CABLE
BATTERY DISCONNECT
TO FUSE
SECTION A-A
1
3/0 RED CABLE
DISCONNECT SWITCH
TO PWR RELAY